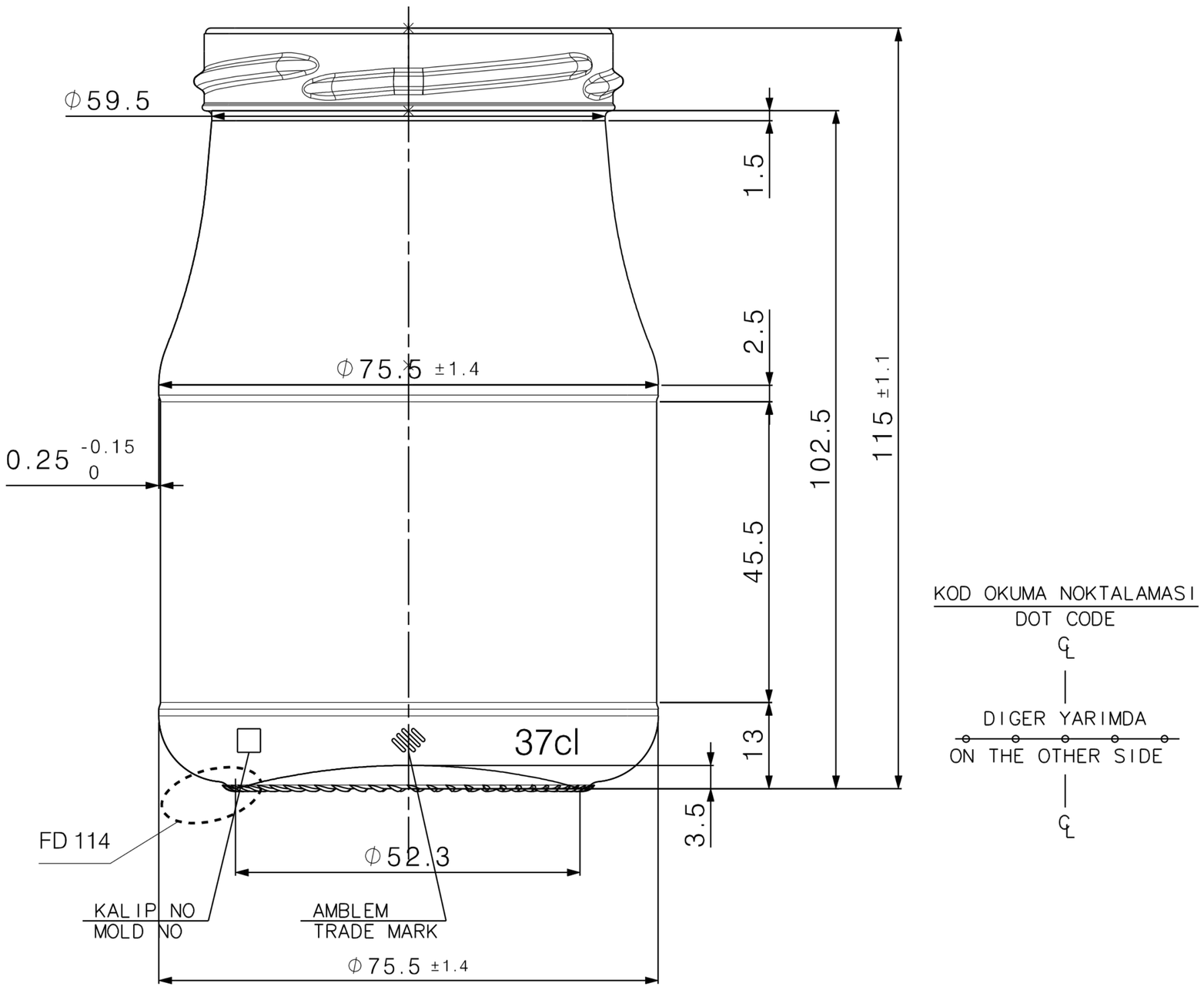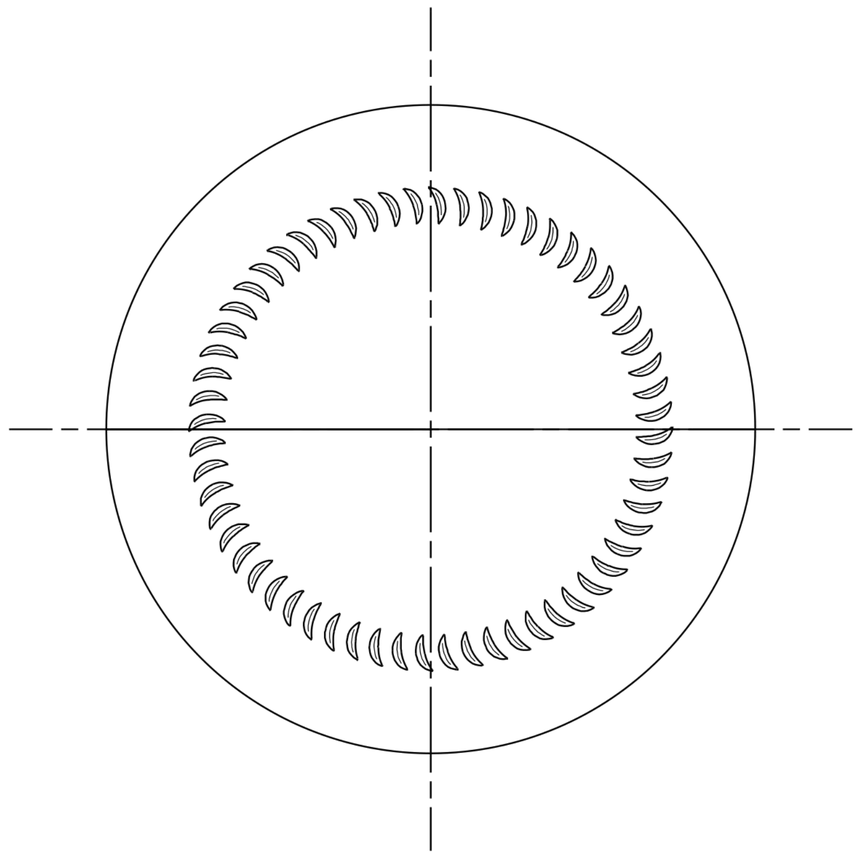
ϕ59.5
1.5
2.5
ϕ75.5 ±1.4
0.25 -0.15 0
102.5
115 ±1.1
45.5
KOD OKUMA NOKTALAMASI
DOT CODE
℄
DIGER YARIMDA
ON THE OTHER SIDE
℄
37cl
13
3.5
FD 114
ϕ52.3
KALIP NO
MOLD NO
AMBLEM
TRADE MARK
ϕ75.5 ±1.4